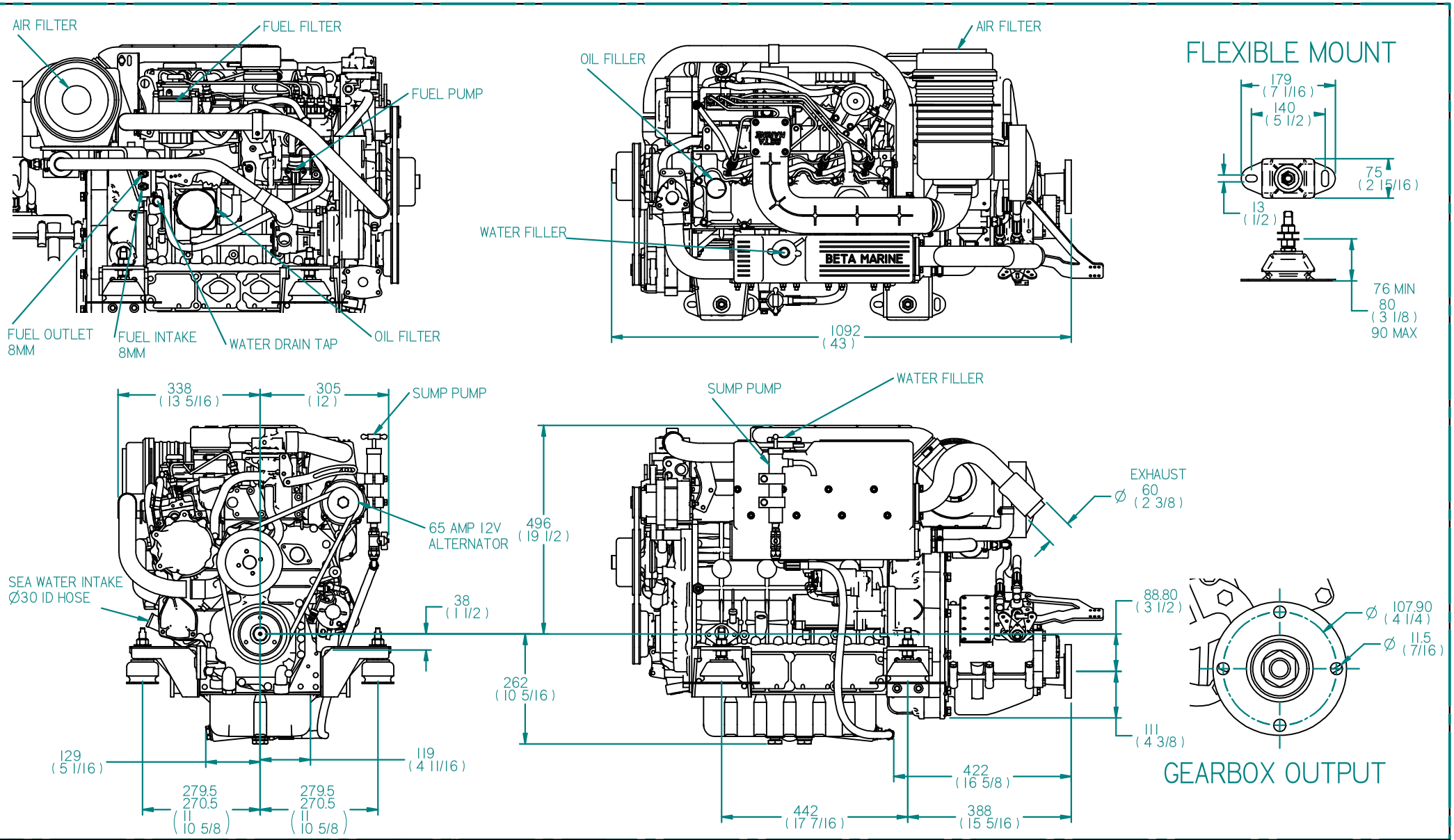

REV	DESCRIPTION	DATE	APP'D	DRAWN
01				

NOTES

TITLE:

BETA 75 HEAT EXCHANGE PRM260

DIMENSIONS IN MM (INCH) DO NOT SCALE

PART FILE NAME: 100-06202 BETA75 (3300) HE PRM260.asm

BETA MARINE

TEL: (01452) 723492 FAX: (01452) 729916

BETA MARINE LTD, DAVY WAY, WATERWELLS, QUEDGELEY, GLOUCESTER. GL2 2AD, UK

DRAWN BY:	SIZE	DWG NO:	REV
TW	A4	100-06202	03
CHECKED BY: LT	SCALE NTS	PAGE 1 of 1	DATE 05/10/2009